Aquaflow Plastic Drainage Products

TECHNICAL DATA SHEET

AQUAFLOW RAINWATER SYSTEMS

Kommercial Technical Data Sheet

This document relates Kalsi Plastics (UK) Ltd.'s Aquaflow 160mm Kommercial, 170mm Deepflow Half Round, and 200mm Kommercial Xtra profiles along with associated downpipes for the collection and discharge of rainwater from roofs.





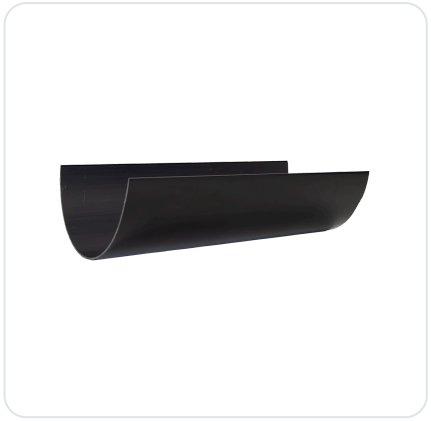

Kalsi Plastics (UK) Ltd.'s Kommercial systems meets the performance requirements of:

BS EN 607	Eaves gutter and fitting of PVC-U definition, requirement, and testing.
BS EN 12200-1	Plastic Rainwater piping systems for above ground external use. Unplasticized poly (vinyl chloride) (PVC-U). Specification for pipes, fittings, and the system.
BS EN 1462	Brackets for eaves gutters. Requirements for testing.
BS EN 1329-1	Plastic piping systems for soil and waste discharge (low and high temperature) within the building structure – Unplasticized poly (vinyl chloride) (PVC-U).
BS EN 681-1	Elastomeric seals. Material requirements for pipe joint seals used in water and drainage applications. Vulcanized rubber

BS EN 1329-1 is applicable to 110mm & 160mm downpipes and fittings.

Compliance with Regulation

If installed, used and maintained in accordance with Kalsi Plastics (UK) Ltd.'s guideline, our Kommercial rainwater systems will meet or can contribute to meeting the relevant requirements of the following Building Regulations.

The Building Regulations 2010 (England and Wales)

Requirement	H3(1) Rainwater drainage.
Regulation	7 (1) Materials and workmanship.

The Building (Scotland) Regulations 2004 (as amended)

Regulation	8(1)(2) Fitness and durability of materials and workmanship.
Regulation	9 Building standards – construction.
Regulation	12 Building standards – conversion.
Standard	3.6 Surface water drainage.
Standard	7.1 (a) Statement of sustainability. The system could contribute to satisfying the relevant requirements of Regulation 9, Standards 1 to 6, and could contribute to meeting a bronze level of sustainability as defined in the standard.

The Building (Northern Ireland) Regulations 2012 (as amended)

Regulation	23(1)(a)(i)(iii)(b)(i) Fitness of materials and workmanship.
Regulation	79 Drainage system.
Regulation	82 Rainwater drainage.

Construction (Design and Management) Regulations 2015.

Construction (Design and Management) Regulations (Northern Ireland) 2016.

Under the above Regulations, there is no information in this document which relates to the obligations of the client, designer (including Principal Designer), and contractor (including Principal contractor) under these Regulations.

In the opinion of Kalsi Plastics (UK) Ltd., their Kommercial rainwater systems if installed and maintained in line with their guidelines, can satisfy the relevant requirements in relation to NHBC Standards, can. satisfy or contribute to satisfying the relevant requirements in relation to NHBC Standards, Part 7 Roofs, Chapters 7.1 Flat roofs and balconies, Clause 7.1.12 and 7.2 Pitched roofs, Clause 7.2.22.

Material Specification

Kalsi Plastics (UK) Ltd.'s Kommercial gutter systems (unless otherwise specified) are manufactured unplasticized poly vinyl chloride (PVCu) compounds.

The above fully complies with the requirements of BS EN 607, BS EN 12200-1, BS EN 1462, and BS EN 1329-1.

All the seals used with Kalsi Plastics (UK) Ltd.'s Kommercial rainwater systems are produced from a synthetic rubber material conforming to BS EN 681.

The use of PVCu material in the Kommercial rainwater systems offers many major advantages including:

- Minimal maintenance.
- Self-coloured – requiring no painting.
- Light weight and easy to handle.
- Does not support combustion.
- Corrosion free.

Product Dimension

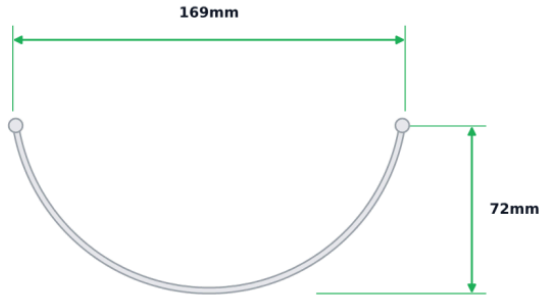

160mm Kommercial Profile



110mm Plain Ended Pipe

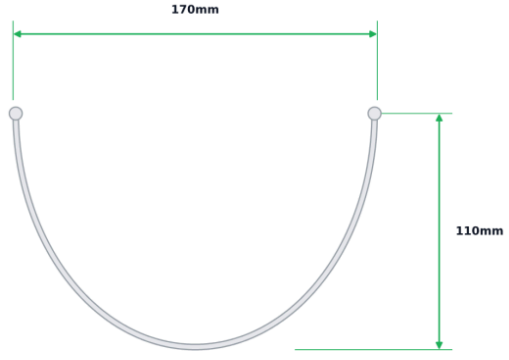

170mm Deepflow Half Round Profile

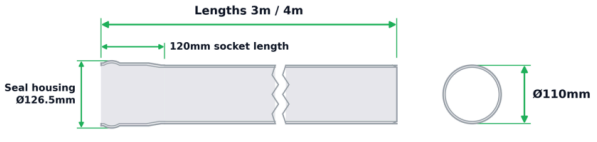

110mm Socketed Pipe

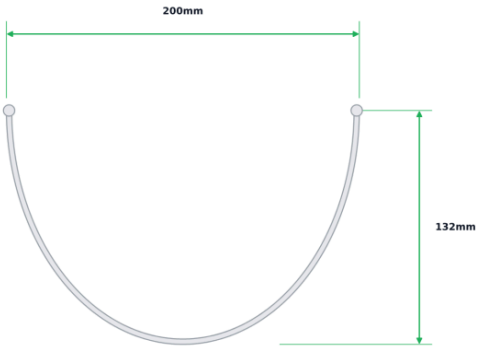

200mm Kommercial XTRA Profile

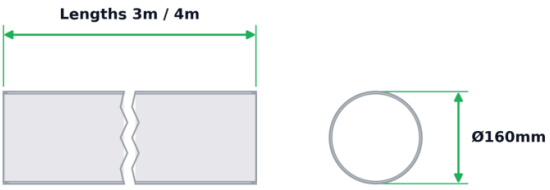

160mm Plain Ended Pipe

Finish

All Kalsi Plastics (UK) Ltd.'s Kommercial gutter systems have a smooth easy to clean surface finish.

Colour

SYSTEM	WHITE	BLACK	GREY
160mm Kommercial		✓	✓
170mm Deepflow Half Round	✓	✓	✓
200mm Kommercial		✓	✓

Structural and Mechanical

PVCu material has good flexural and tensile characteristic, however as with all types of gutters ladders should not be placed directly on gutter, they should be held away with a ladder stay or positioned to avoid direct contact which can cause damage to the gutter, brackets and/or fittings.

Kalsi Plastics (UK) Ltd.'s Kommercial rainwater systems are suitable for their designed application including:

- It is particularly suited for commercial, industrial, and larger residential properties that require a robust and efficient solution to handle heavy rainfall.
- Building Regulations (Approved Document H) requirements.
- The requirements of the Building Regulations 2010 as set out in Approved document H part 3.
- As an alternative to this requirement is to follow the relevant recommendations of BS EN 12056-3 Roof Drainage, Layout and Calculation. Note: For non-standard applications, please consult Kalsi Plastics (UK) Ltd.

- When installed in accordance with Kalsi Plastics (UK) Ltd.'s installation instructions, the Kommercial systems will withstand the wind loads likely to be encountered in the United Kingdom, without damage or permanent deflection.
- All of Kalsi Plastics (UK) Ltd.'s Kommercial rainwater systems have been extensively tested to withstand heavy snow loads in accordance with BS EN 1462 & BS EN 12056-3. When fixing brackets below a steeply pitched/slate tiled roof or in areas subject to heavy snow, it is recommended that fixing centres of the brackets are reduced. Note: Please consult Kalsi Plastics (UK) Ltd., for further information.
- Consideration should be given in areas of high snow falls and where severe ice might be expected. It is recommended that snow guards be fitted to the eaves of the pitched roofs. This precaution should also be considered wherever sliding snow might cause damage/injury to persons or structures below (as recommended in BS EN 12056-3).
- Kalsi Plastics (UK) Ltd.'s Kommercial gutter systems must not be installed under 0°C to avoid potential breakages.

Thermal Expansion

Kalsi Plastic (UK) Ltd.'s Kommercial rainwater systems have been designed to accommodate normal thermal movement without leakage, distortion, or displacement from fittings.

The coefficient of linear expansion of PVCu can be calculated using 6 x 10-5 and all of Kalsi Plastics (UK) Ltd.'s Kommercial rainwater systems have been designed to take this into account.

Tests have been conducted between -8°C and +40°C where an expansion of 11.52mm was experienced over a 4-metre length.

In extreme hot weather conditions normal daily temperature fluctuations, expansion and contraction will be in the region of 15mm per 4 metre length.

Care is necessary to ensure that gutters are assembled to allow for excessive expansion or to expansion lines when on the product.

Service Temperature

Kalsi Plastics (UK) Ltd.'s Kommercial PVCu rainwater systems have a softening point of 75°C.

Biological Chemical Resistance

PVCu is vermin and rot proof and has good resistant properties to most solutions of acids, alkalis, salts, solvents miscible with water and most commonly occurring chemicals, so will not be affected by domestic effluents.

PVCu is not resistant to aromatic and chlorinated hydrocarbons, solvents including those incorporated in most timber preservatives.

Kalsi Plastics (UK) Ltd incorporate high-quality pigments within their Kommercial rainwater products which afford outstanding durability and helps to prevent degradation by air pollution and U.V light.

The Kommercial systems are self-coloured through the pigment system and corrosion resistant; the material therefore does not require painting. However, if painting is required, a good quality gloss paint or paint specific to PVC should be used. Standard gloss paint may be used if:

- The PVC surface has weathered for some time which will occur naturally.
- The system has been cleaned, with degreasing agent such as sugar soap or warm soapy water.
- Once cleaned two coats of good quality gloss paint should be applied.
- Avoid scouring or roughing the surface of the plastic as this effect the final appearance of the painted product.
- Contact with bituminous liquids is not advisable. It is essential that fascia boards treated with preservative such as creosote are left for at least 48 hours to dry before installation commences.

Polluted atmospheres may affect plastic rainwater systems. For further details on Chemical Resistance, please refer to Kalsi Plastics (UK) Ltd.'s website or refer to:

- PD ISO/TR 10358 for PVC-U materials.
- PD ISO/TR 7620 for seals.

If seals need lubricating use a good quality silicone lubricant should be applied. Do Not use washing up liquid or detergents as this will cause the seal to degrade.

Durability

The gutter system is made from a conventional material as used in gutter systems conforming to BS EN 607, BS EN 12200-1, and BS EN 1462.

Given regular and proper maintenance, rainwater systems have a life expectancy of 20 years (excluding colourfastness).

A planned cleaning program is essential to maintain the gutters appearance. For further details, please see section entitled Cleaning and Maintenance

Colour Fastness

Kalsi Plastics (UK) Ltd.'s Kommercial rainwater systems are fully tested against BS EN 607, BS EN 12200-1, and BS EN 1462. This includes artificially ageing of the product to method A of BS EN ISO 4892-3 and measuring the colour fastness to BS EN 20105-A02.

This testing does not guarantee that the surface colour of the rainwater system will not change over a period. This is a measure of the degree of change according to the controlling standard.

Fire Performance

Kalsi Plastics Ltd.'s, gutter, pipes, and fittings are manufactured in PVC-U, which is not easily ignitable and will not support combustion.

Interior applications of plastic pipes may require protection in compliance with Building Regulations.

Performance of Joints

Correctly made joints between gutter sections and fittings are watertight under conditions of thermal movement more than those expected to occur in practice.

Kalsi Plastics (UK) Ltd.’s 160mm Kommercial and Deepflow Half Round gutter systems use 110mm plain ended or single socket down pipes, whilst 200mm Kommercial gutter systems use 160mm single socket downpipes. Both the 110mm & 160mm single socket downpipes are fitted with seals. These are hydrostatically tested under the requirement of BS EN 1329-1 and under normal conditions won’t leak. In the event of a blockage of the downpipe, water leakage may occur at joints.

Flow Characteristics

Flow capacities associated with Kalsi Plastics (UK) Ltd.’s Kommercial rainwater systems, when calculated in accordance with BS EN 12056-3, are given in the tables below.

Outlet at the Centre of the Gutter Run

SYSTEM	LEVEL	1:350 GRADIENT
160mm Kommercial	4.60 Litres/Sec	6.47 Litres/Sec
170mm Deepflow Half Round	8.20 Litres/Sec	10.80 Litres/Sec
200mm Kommercial	12.50 Litres/Sec	14.00 Litres/Sec

Outlet at the End of the Gutter Run

SYSTEM	LEVEL	1:350 GRADIENT
160mm Kommercial	2.50 Litres/Sec	3.25 Litres/Sec
170mm Deepflow Half Round	4.20 Litres/Sec	5.25 Litres/Sec
200mm Kommercial	6.70 Litres/Sec	8.70 Litres/Sec

(1) Reduced capacities apply where bends are incorporated (see BS EN 12056-3)

(2) The effective area is based upon the Building Regulation value of 0.022 l /s-1/ m-1 and should be calculated in accordance with BS EN 12056-3

Maintenance and Cleaning

Ongoing satisfactory performance of Kalsi Plastics (UK) Ltd.’s Kommercial systems in use requires that it is suitably maintained in accordance with BS EN 12056-5.

More frequent inspections may be necessary in areas of high pollution and where there are trees in the vicinity. It is important to clear gutter systems of fallen leaves and other debris at least once a year.

Inspection of the gutter and brackets is also advisable during and after periods of ice formation in the guttering system.

The following requirements apply in order to undertake maintenance.

The system must be designed so that access for maintenance and cleaning is provided by conventional means. Damaged sections can be removed and replaced.

Periodic inspections must be carried out in accordance with BS EN 12056-3, Clause NE 5.1 to ensure that the outlets are free from gravel, leaves and other debris which could impair the performance of the system. Maintenance is the responsibility of the building owner.

The material is manufactured from a self-coloured material which does not require painting. To maintain the appearance, the system should be washed periodically with soapy warm water, in severe cases a non- abrasive kitchen cream cleaner should be used.

Installation

Installation must be in accordance with Kalsi Plastics (UK) Ltd.'s installation instruction and/or BS EN 12056-3.

Gutter Installation

Kalsi Plastics (UK) Ltd.'s Kommercial gutter systems are supported by the unions, outlets, and gutter support brackets, all of which must be fully fixed to the fascia or support bracket, using all the fixing holes.

Sequence

- The gutter outlet must be placed vertically above the drain inlet or gully from which the rainwater will be conveyed to the underground drainage system.
- Fix the outlet in position on the fascia allowing whatever fall if required, using 25mm x 5mm, zinc plated or sherardised round head.
- Position and fully fix the gutter support bracket furthest from the outlet, at a position on the fascia which will produce a run of gutter either a horizontal run or to the desired fall, using 25mm x 5mm, zinc plated or sherardised round head screws.
- Stretch a line taut between the fixed outlet and support bracket, establishing a straight gutter line.
- Fully fix the remainder of the fascia brackets and fittings using all screw holes to the fascia following this line, a joint bracket being positioned at each junction of two gutter sections, using 25mm x 5mm, zinc plated or sherardised round head screws (do not use countersunk head screws as these can crack the plastic).
- All fittings must be supported with a fascia within 150mm of either side of the fittings.

Gutter Support Brackets

> **Gutter support spacing should NOT EXCEED 600mm.** Roofs with a pitch of, or exceeding, 35° and/or with smooth surfaces should prompt consideration of the effects of heavy snow loading. Improved roof space insulation now prevents snow from melting on impact and is more likely to accumulate to a critical amount.

In such instances, support spacing centres should NOT EXCEED 300mm and snow boards should be fitted. All gutter fittings incorporate fixing positions, which must be used during installation.

Fitting Gutter

To snap the gutter section into the support fittings, first push the rear edge of the gutter up hard under the rear retaining clip of the fitting. Then pull the front edge of the gutter out and down with one hand, and the front edge of the support fitting out and down with the other hand, while pushing the front retaining clip over the front edge of the gutter with the thumbs, until the gutter snaps into place.

> **Thermal movement allowance.** When each length of gutter has been snapped into position check that each end is not inserted up to the stop and an expansion gap of 15mm is left. This allows the gutter to move with changes in temperature without distortion.

Downpipe Installation

Downpipe installations must accommodate thermal movement. This accommodation of approximately 10mm at the bottom of each 110mm and 160mm pipe section.

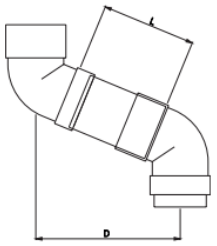

Sequence

- Commence assembly of the downpipe by fabricating an offset from the gutter outlet to the wall using a top and bottom offset bend connected by a length of pipe cut to suit the soffit depth of the building. The 110mm and 160mm offset bend sockets must be solvent welded to the pipe.
- Insert a piece of pipe, length at least equal to socket depth, or otherwise to suit fascia depth, into the top offset bend socket, and fit tightly underneath the running outlet. Secure the bottom offset bend to the wall with a bracket using 25mm x 5mm, zinc plated or sherardised round head screws so that the entire assembly is a solid fit under the outlet.
- Fit the downpipe working from the top. Secure 110mm and 160mm pipe at the top using a pipe and fitting bracket under the socket shoulder. The lower end of this pipe must be inserted 10mm less than the full socket depth when connecting the next pipe or fitting.
- Fit additional lengths of pipe or fittings using the same principles to achieve thermal movement allowance at bottom. Secure with a bracket at each fitting or socket, and on the pipe as necessary to ensure support at centres no greater than 2m.
- If the height of the installation exceeds 10m in height galvanised metal brackets must be used to support the installed weight when using 110mm and 160mm downpipes.

Connecting to Underground Drainage

110mm downpipes can be connected directly to a PVC underground drainage system where the system is of a greater diameter, or an adaptor can be used.

Screws

All brackets and fittings should be fixed using 25mm x 5mm, zinc plated or sherardised round head screws, do not use countersunk head screws as these can crack the plastic.

> **Do not use nails in any circumstances.**

Cutting

Gutter and downpipe sections can be cut with a hand saw having 6-8 teeth per cm, held at a shallow angle, and sawing with slow steady strokes. A file should be used to remove any swarf or burrs. Clean all cuttings and swarf from the gutter and downpipe ends to avoid damaged or ineffective seals. Lubricate all seals in gutter and downpipe fittings for ease of installation.

TESTING

When rainwater installations are complete, gutters should be tested for watertightness under working conditions and internal downpipes should also be tested as prescribed in the relevant Building Regulations. Attention should be paid to the requirements of local authorities. Guidance is also given in BS EN 12056-3:2000.

Transport, Handling and Storage

Gutters are delivered in bundles of 4, 110mm downpipes in bundles of 2, 160mm downpipes in bundles of 2, protected by opaque polythene sleeving, which must not be removed prior to installation.

Each bundle is packed in a sleeve and labelled by Kalsi Plastics (UK) Ltd and each product within the packs are printed with its details at 1-metre intervals. Fittings are delivered in labelled cardboard boxes, with each product being clearly identified with its details.

Delivery and site handling must be transported in their original packaging if possible.

During unloading they must be handled with care to avoid damage.

Gutter and pipes must be stored on a flat surface and not dragged across the floor or pulled over edges.

Care must be taken not to drop the system components on their ends, particularly during cold weather conditions.

The system components must be protected from direct sunlight if long-term storage is envisaged.

If products are split from the packaging in which Kalsi Plastics (UK) Ltd supply them in, installers should be advised to store gutters and pipes flat, out of direct sunlight.

If fittings are placed in clear bags the bag should not be sealed, they should be left open and the products must not be stored in direct sunlight. Storing products in sealed clear bags magnifies the heat inside the bags and can cause products to distort prior to installation.

Guarantee

Subject to normal wear, and atmospheric conditions, AQUAFLOW will guarantee that its Kommercial systems will retain their decorative function for 5 years on black and grey products and will weather within the Industry Norm Limits, with only minor changes in surface appearance.

Aquaflow rainwater systems are fully tested against BS EN 607, BS EN 12200-1, and BS EN 1462. This includes artificially ageing of the product to method A of BS EN ISO 4892-3 and measuring the colour fastness to BS EN 20105-A02.

This testing does not guarantee that the surface colour of the rainwater system will not change over a period. This is a measure of the degree of change according to the controlling standard.

The guarantee period commences from the date of manufacture. In the unlikely event that a defect appears within this period, AQUAFLOW must be notified, in writing, of such defects. The sole and exclusive remedial action in the respect to the above guarantee or with respect to any other claims relating to defects or any conditions arising from the use of products supplied by AQUAFLOW, however caused, is limited to repair or replacement of such products at AQUAFLOW discretion.

AQUAFLOW does not make any other representations or guarantees and in no event shall AQUAFLOW be liable for loss or damage, whether direct or indirect, special, or consequential, including, but not limited to the cost of installation.

Nothing in this guarantee affects the statutory rights of the consumer.

References

BS EN ISO 9001: Quality Management Systems Requirements.

BS EN 12200-1: Plastics rainwater piping systems for above ground external use. Unplasticized poly (vinyl chloride) (PVC-U). Specifications for pipes, fittings, and the system.

BS EN 607: Eaves gutters and fittings made of PVC-U. Definitions, requirements, and testing.

BS EN 1462: Brackets for eaves gutters – Requirements and testing.

BS EN 1329-1 Plastics piping systems for soil and waste discharge (low and high temperature) within the building structure. Unplasticized poly (vinyl chloride) (PVC-U). Specifications for pipes, fittings, and the system

BS EN 681-1 Elastomeric seals. Material requirements for pipe joint seals used in water and drainage applications. Vulcanized rubber.

The Building Regulations 2010

Building (Scotland) Regulations 2004

Building Regulations (Northern Ireland) 2012